Rixson® is a registered trademark of Yale Security Inc., an ASSA ABLOY Group company. Copyright © 2005, 2009, Yale Security Inc., an ASSA ABLOY Group company.
All rights reserved. Reproduction in whole or in part without the express written permission of Yale Security Inc. is prohibited.

Notes:
1. Do not scale drawing.
2. Minimum pivot point from heel edge of door is 2".
3. All dimensions are in inches.

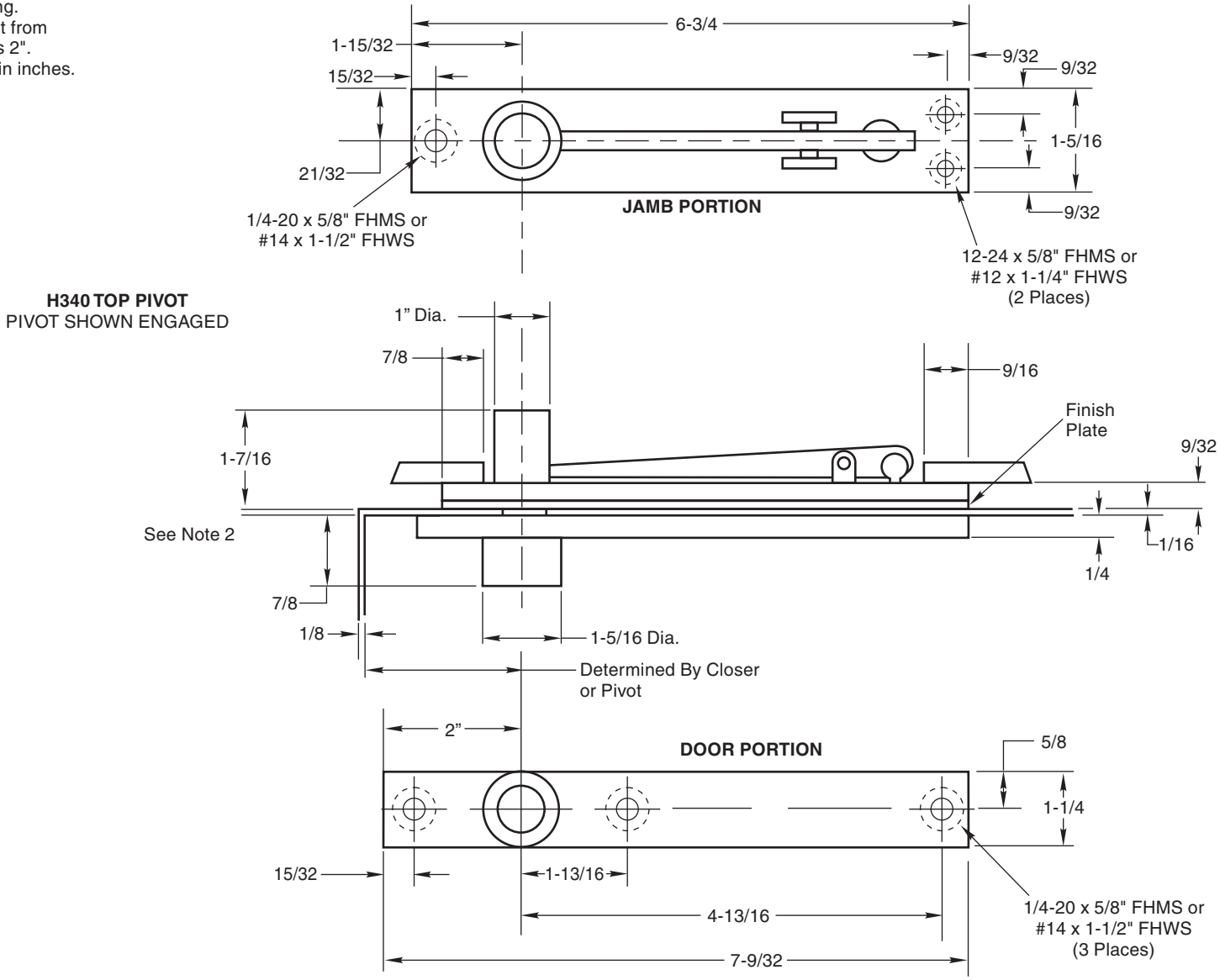

H340 Top Pivot
Center Hung

RIXSON®
ASSA ABLOY
www.rixson.com

TEMPLATE NUMBER	DATE
TP40240	12-09